TRUCK Solutions

www.texa.com

TEXA

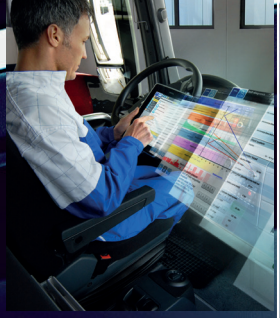

GLOBAL SPECIALISTS IN DIAGNOSTICS

TEXA has been the mechanic's first choice for over twenty years, thanks to consolidated leadership in the design and manufacture of diagnostic tools for cars, trucks, bikes, agricultural machines and marine engines. TEXA's tools cover the diagnosis of electrical and electronic systems, exhaust gas analysis and the maintenance and recharging of vehicle air conditioning systems. Over the years, TEXA has built up an extensive global network of over 700 distributors in over 100 nations.

A complete and modular offer

TEXA offers the mechanic total assistance during all phases of repair, from the analysis of fault symptoms to the identification of the right spare part. TEXA boasts an unrivalled offering of tools and services, designed to satisfy all possible needs, from dedicated workshop tools to operating software, specialist training and customer services.

IDC4E: THE HEART OF TEXA DIAGNOSTICS

IDC4E TRUCK is the latest evolution in TEXA's extraordinary software platform for the management of all routine workshop tasks. It incorporates the results of constant development by TEXA technicians and ongoing dialogue with customers around the world.

AN EVEN MORE INTUITIVE SOFTWARE INTERFACE

NEW from TRUCK V.36

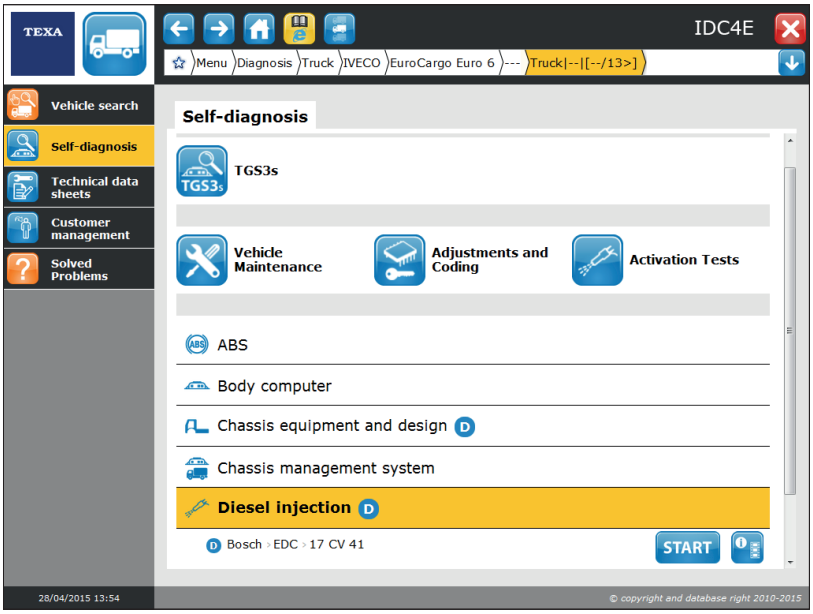

In developing IDC4E, we concentrated on making it even easier for mechanics to access the most frequently used functions, starting from vehicle selection. We also put a great deal of effort in to making it possible to scan all the control units on a vehicle. The new "START" button, located alongside the selected system, provides instant access to the Errors screen. Navigation between the various screens is easier than ever thanks to the introduction of tabs, and the new "Wiring Diagram Detail" function makes an instant link between an error detected in an ECU and the corresponding component on the wiring diagram. The "Favourite Parameters" function lets you create logical parameter groupings for investigating possible malfunctions on the vehicle. The Client Manager section has also been redesigned and lets you manage your customers through detailed profiles of their vehicles and the jobs done on them.

EXCLUSIVE IDC4E FUNCTIONALITIES

IDC4E is the software to beat when it comes to multi-brand diagnostics. IDC4E provides an extensive series of exclusive functionalities developed and optimised by TEXA's own R&D department.

Automatic Vehicle Search

The Vehicle Search function identifies the model you are working on precisely and rapidly. Quick and intuitive, Vehicle Search function can be used in the following ways:

VIN code search: with the diagnostic tool connected to the vehicle's OBD socket, this function automatically retrieves the VIN and then selects the exact model of vehicle from the IDC4 software database.
Engine number search: in this case the vehicle is identified simply by entering the engine number.
Registration number search: this function lets you find and load data for any vehicle saved in IDC4's Customer Management database, simply by entering its registration number or even just part of it.
Text search: this function lets you identify the vehicle you are working on by searching for information such as model name or power in kW or HP.
The Vehicle Search function also lets you run a model-specific scan directly from the vehicle selection menu, just by touching a button alongside the make.

"SOLVED PROBLEMS"

powered by Google© (by subscription)

Using this function, HGV technicians can carry out repairs rapidly and applying the correct procedure, exploiting Google search technology to access the TEXA troubleshooting database, containing solutions found by HGV technicians all over the world and collected by TEXA's international call centres.


NAVIGATOR
TXT

TGS3s global system scan

The amazing TGS3s automatically scans all the diagnosable* control units on the vehicle. The system is impressively fast in the way it recognises the ECUs and accesses the relevant diagnostics. On completion of the scan, TGS3s immediately displays any errors detected on the vehicle along with the relevant error codes and descriptions. It also lets you read and reset errors with a single click. You can even run autodiagnostics on selected systems directly from the error detection screen.

*TGS3s scanning may not function with older models of vehicle since previous generation control units may not support the latest scanning functionalities.

Freeze Frame

Freeze Frame lets you 'freeze' the display of parameters and data detected at the moment a fault occurs. The actual information displayed by Freeze Frame may vary from one vehicle manufacturer to another and from one type of system to another.

Error Help

"Error Help" is the easiest and most accessible way to obtain information on errors. The help content provides useful information on the meaning of error messages and, if necessary, on what checks to perform first.

Wiring Diagram Detail

This function makes an instant link between the error read from the control unit and the corresponding component on the wiring diagram. From the wiring diagram you can access the test functions and device descriptions typical of the IDC4E operating environment.

Recording of diagnostic sessions (Rec & Play)

Faults sometimes only occur under specific operating conditions. For example, power may be lost only when driving uphill or when the engine is under a high load, or perhaps a warning light comes on only when the engine is hot. Under conditions like these, the Rec&Play function offers the perfect solution, as it lets you record parameter values and any errors that occur during a road test. Data can be viewed and analysed later and even printed out as a report on the test.

OEM Vehicle Check-Up

This function displays a list of systems configured on a vehicle and lets you view a list of any errors detected. The function identifies all ECUs and reads their error logs (3 to 20 times faster than normal). It also determines the state of each error (active or logged) and provides instant access to the "Error Help" function and related fault solutions. In addition, the function lets you select and display a determined group of ECUs and even cancel errors without having to re-establish dialogue between tool and control unit.

Special reprogramming functions


Knorr TEBS G2


Knorr APU/APM


Wabco EBS-2


Bosch Denoxtronic


Wabco EBS-E


ZF As-tronic

Specific vehicles and/or systems may require special functions, such as: reprogramming of new generation air dryers (APU: Air Processing Unit / APM: Air Processing Module); programming of ZF As-Tronic® transmissions; advanced configuration of new EBS braking systems on trailers; and replacement of electronic control units with the possibility of transferring parameter settings from the old unit to the new one. All these special functions can be performed easily and safely in IDC4E TRUCK.

DASHBOARD

DASHBOARD* is an exclusive function of IDC4E operating software that lets you view a vehicle's functioning parameters. Its attractive and intuitive graphic interface reproduces a truck's dashboard, mechanical organs and functioning logic.

* Customers using an AXONE 4 diagnostic tool will find DASHBOARD already present and active. Customers using other diagnostic tools can purchase DASHBOARD as a dedicated app from the "TEXA APP" virtual store.

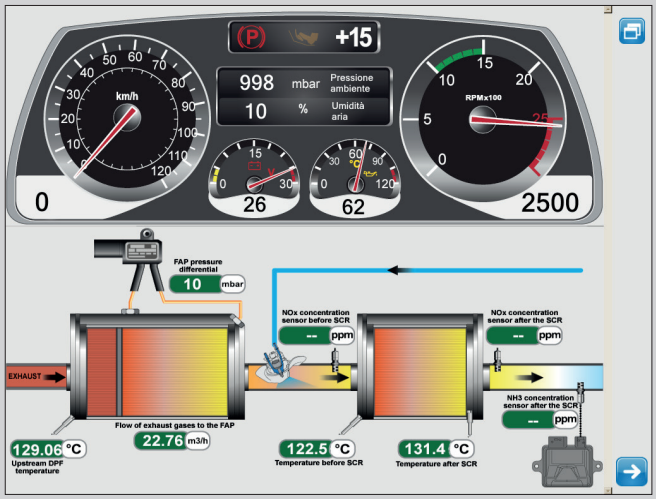

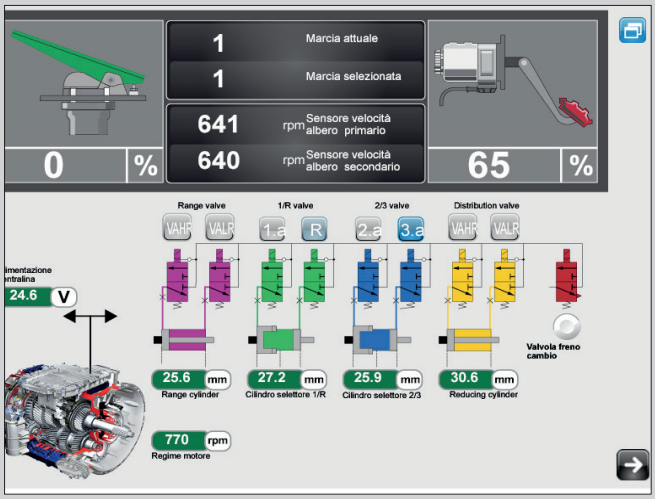

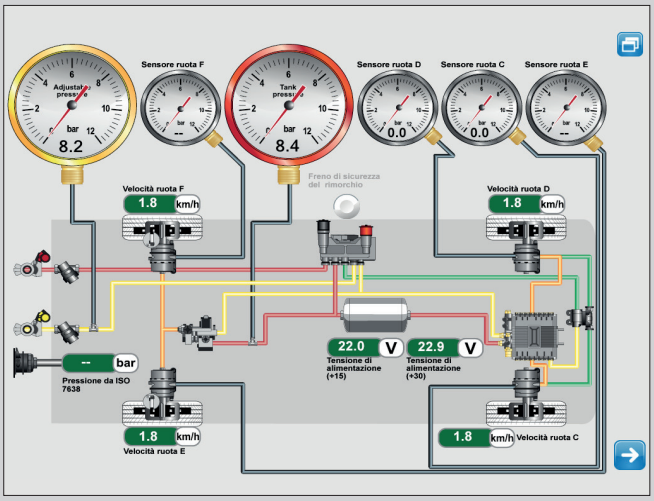


+15
998 mbar Pressione ambiente
58 % Umidità relativa
km/h
RPMx100
23
70
2400
1112 bar Pressione rail
1120 bar Pressione rail obiettiva
15.7 mg/ciclo Mandata carburante totale
14.5 mg/ciclo Mandata carburante principale
1.3 mg/ciclo Mandata carburante pre-iniezione
Temperatura carburante
20.5 °C
EDC
Duty Cycle valvola MPROP
85 %

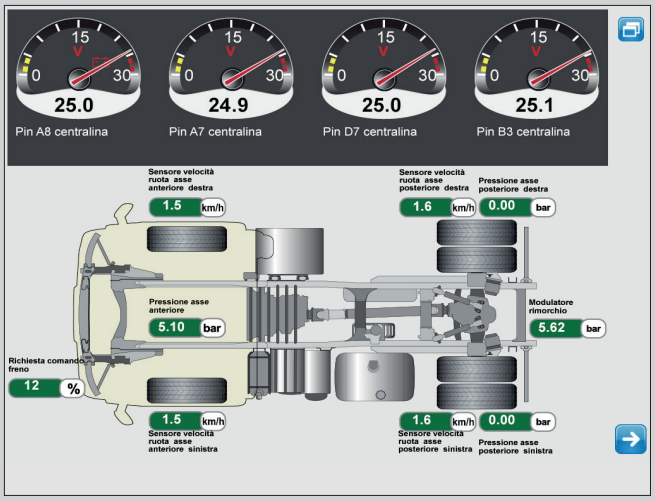
25.0
Pin A8 centralina
24.9
Pin A7 centralina
25.0
Pin D7 centralina
25.1
Pin B3 centralina
Sensore velocità ruota asse anteriore destra
1.5 km/h
Sensore velocità ruota asse posteriore destra
1.6 km/h
Pressione asse posteriore destra
0.00 bar
Pressione asse anteriore
5.10 bar
Modulatore rimorchio
5.62 bar
Richiesta comando freno
12 %
1.5 km/h
Sensore velocità ruota asse anteriore sinistra
1.6 km/h
Sensore velocità ruota asse posteriore sinistra
0.00 bar
Pressione asse posteriore sinistra

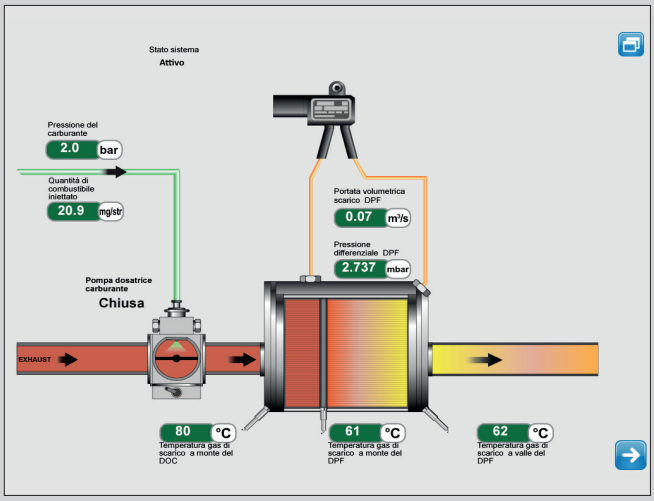
Stato sistema
Attivo
Pressione del carburante
2.0 bar
Quantità di combustibile iniettato
20.9 mg/str
Portata volumetrica scarico DPF
0.07 m³/s
Pressione differenziale DPF
2.737 mbar
Pompa dosatrice carburante
Chiusa
EXHAUST
80 °C
Temperatura gas di scarico a monte del DOC
61 °C
Temperatura gas di scarico a monte del DPF
62 °C
Temperatura gas di scarico a valle del DPF

SUPPORT FOR AUTODIAGNOSTICS

Technical Specifications, Data sheets and Wiring Diagrams provide detailed information on the functionalities of individual systems to support autodiagnostic tests. In addition, users can also look up specific mechanical data for each vehicle.

Technical Specifications

An extraordinary database containing details of all vehicles. Users can find detailed and comprehensive information on Mechanical Specifications, Wheel Alignment, Tyre Pressures, Timing Belt, Routine Maintenance, Component Locations, Component Testing and much more besides.

Data sheets

TEXA's technical bulletins provide superbly accurate information on the selected vehicle, including instructions for performing a manual reset after servicing, overviews of specific mechatronic systems and much more besides.

System wiring diagrams

Wiring diagrams are prepared by TEXA's own engineers. Because they follow the same standard for all vehicle manufacturers, they are a great help in troubleshooting. While you are consulting a wiring diagram, you can also access related datasheets by selecting a specific component or use the SIV function to perform oscilloscope tests using automatically selected settings.


TEKA.ORG
TEKA
Self-diagnosis

TEXA APP*

TEXA APP is a totally new addition to the world of multi-brand diagnostic tools. The TEXA APP virtual store lets you request activation of a large number of applications for the vehicle repair mechanic with one simple click.
TEXA APP provides diagnostic software and innovative applications developed by TEXA. It allows you to customise your tools directly from IDC4E software, adding the most suitable functionalities for your own purposes. Your diagnostic tool therefore becomes more modular and flexible than ever in the way it matches your professional requirements.

The TEXA APP store is divided into two different sections:

- TEXA APP: this section lists all available software and applications developed by TEXA; it can be used to extend coverage or software functions by upgrading to a new version, or to activate new APPs as they are released.

- PARTNER APP: this section lists apps developed as the result of TEXA's partnership with providers of goods and services for automotive mechanics, including manufacturers and distributors of spare parts, specialist magazines, technical information services and so on.

* Check the availability of TEXA Apps for your tool.


LPG
CNG
FEDERAL MOGUL
TEXA
APP
FIAMM
TPMS
VAG

UNRIVALLED COVERAGE

Vehicle diagnostics is TEXA's core business. To keep ahead of the competition, TEXA is committed to offering its customers the best possible coverage of vehicles in circulation. The various teams operating in TEXA's European subsidiaries have recently been complemented by new teams working directly in Asia to ensure prompt and accurate coverage for Japanese, Korean, Chinese and Indian vehicles. This network guarantees customers all over the world a coverage that is simply without rivals in terms of the number of vehicles covered and the quality of the coverage provided. Regular software updates are guaranteed by subscription to TEXPACK.

TRUCK

AGRALE
ASTRA
AUTOCAR
AVIA
BEIFANG BENCHI
BREMACH
BUCHER-SCHÖRLING
CARMICHAEL
CVS FERRARI
DAEWOO
DAF
DENNIS EAGLE
DODGE
DONGFENG
DULEVO
E-ONE
ERF
FAW
FORD
FODEN
FREIGHTLINER
GAZ
GMC
HINO
HYUNDAY
INTERNATIONAL
ISUZU
IVECO
IVECO (BRASIL)
IVECO DVD
KALMAR
KAMAZ
KENWORTH
LIEBHERR
MACK
MAN
MAZ
MERCEDES-BENZ
MERCEDES-BENZ (BRASIL / ASIA PACIFIC)
MITSUBISHI FUSO
MULTICAR
NISSAN
O.ZETA CLES
PETERBILT
RENAULT TRUCKS
SCANIA
SHAANXI
SHACMAN
STERLING
TADANO FAUN
TATRA
TERBERG
TEREX
VOLKSWAGEN TRUCKS
VOLVO TRUCKS
WESTERN STAR

BUS

AGRALE
ALEXANDER DENNIS
AUTODROMO
AUTOSAN
AYATS
BARBI
BEIFANG BENCHI
BCI
BEULAS
BLUE BIRD
BMC
BREDAMENARINI
CACCIAMALI
CAIO
CASTROSUA
COMIL
CROBUS
DAEWOO BUS
DALLA VIA
DE SIMON
FAST
FIAT
GOLDEN DRAGON
GULERYUZ
HINO
HYUNDAY
IRISBUS
IRIZAR
ISUZU
IVECO
KAMAZ
KING LONG
LEXEA
LIAZ
MAN
MARCOPOLO
MAZ
MERCEDES-BENZ
MERCEDES-BENZ (BRASIL)
MERCEDES-BENZ (EVOBUS)
MERKAVIM
MITSUBISHI FUSO
NEOPLAN
NOGE
OPTARE
OTOKAR
PAZ
RAMPINI
RENAULT TRUCKS
SCANIA
SETRA
SHENLONG
SOLARIS
SOLBUS
SOR
SUNSDEGUI
TATA
TEMSA
TOYOTA
TOYOTA CAETANO
TVM-MARBUS
VAN HOOL
VDL BERKHOF
VDL BOVA
VDL BUS
VDL BUS & COACH
VDL JONCKHEERE
VISEON
VOLKSWAGEN BUS
VOLVO TRUCKS
VOLZHANIN
YUTONG
WRIGHT BUS

LIGHT VEHICLES

AGRALE
CITROËN
DACIA
DODGE
FIAT
FORD
HYUNDAI
IVECO
LDV

Over 125.000 diagnostic options

MERCEDES-BENZ
MERCEDES-BENZ
(EVOBUS)
NISSAN
OPEL (GM)
PEUGEOT
RENAULT
SOLLERS FIAT
SUZUKI
TOYOTA
VOLKSWAGEN

TRAILER AND SEMI TRAILERS
BPW
HALDEX
KNORR
THERMOKING
WABCO
BREMACH
WRIGHT BUS

POWER TRAIN
DEUTZ
DETROIT
PACCAR
VM MOTORI
VOITH

To check the extensive coverage of TEXA products, go to
www.texa.com/coverage

DIAGNOSTIC SOLUTIONS

TEXA's diagnostic solutions are based on the powerful AXONE 4 display unit and on the robust NAVIGATOR TXTs vehicle interface. These devices interconnect via Bluetooth and dialogue with the vehicle's electronic control units. They guarantee levels of speed and performance that are simply unrivalled in the world of multi-brand diagnostics.

TEXA devices provide unique support for today's vehicle mechanics and also stand out for their ease of use and versatility. All TEXA interfaces are fully compatible with standard personal computers.

AXONE 4

TEXA's top of the range, most powerful display unit is designed to solve all the problems that can occur both inside and outside the workshop. It is extremely robust, impact and fall resistant, waterproof and dust-proof (IP 67 standard) and even conforms to military standard MIL STD 810F. AXONE 4 also has a remote assistance function to allow TEXA's experts to connect remotely and see exactly what is happening. A DUAL MODE function lets you connect temporarily to two different interfaces, so that you can run autodiagnostics on one component while monitoring the signal of another on the oscilloscope, for example.

EXCLUSIVE FOR AXONE 4

IDC4E PREMIUM software with special functions for faster access to the desired applications.


WWW.TEXA.COM
TEXA

NAVIGATOR TXTs

NAVIGATOR TXTs 26 pin is the most powerful, highest performer of TEXA's vehicle interfaces and lets you work in the CAR, TRUCK, BIKE, OFF-HIGHWAY and MARINE environments. You can use it to run autodiagnostic tests, view engineering parameters and states, activate devices, perform adjustments and configurations, reset warning lights, maintenance, service and airbag indicators, configure ECUs, program keys and remotes, and more besides.

The NAVIGATOR TXTs is compatible with PASS-THRU protocol*, which allows workshops to connect to manufacturers' central servers and download software packages or official technical information.

* Go to www.texa.com/passthru to verify compatibility and the functions made available by individual vehicle makers.

ELECTRICAL DIAGNOSTICS

In many cases, autodiagnostics cannot provide the answer. If a vehicle's ECUs have no errors logged, the problem may well lie in an electrical or mechanical failure. Conventional diagnostics are needed in these circumstances, and analog and digital measurements taken to determine the efficiency of components like the battery, injectors, CAN network and heating elements. TEXA's UNIProbe and TwinProbe interfaces let you make all the physical measurements you need to perform a conventional diagnosis and identify potential faults.

UNIProbe and TwinProbe

UNIProbe and TwinProbe are two devices for acquiring the analogue and digital measurements needed for conventional diagnostic testing.

UNIProbe includes:

• Oscilloscope: four independent analogue channels, complete with SIV function for interpreting measured signals.

• Battery Probe: for testing the battery, analysing and checking the entire starting and charging system.

• TNET: for the measurement and electrical analysis of CAN automotive communication networks.

• Signal Generator: for simulating the pulses generated by sensors and the commands generated by control units and testing solenoid valves and other components.

• Multimeter: for voltage, resistance and current measurements (using a clamp-on ammeter).

• Pressure Tester: for checking fuel supply and turbocharger pressure on all vehicles.

TwinProbe includes:

• Oscilloscope: two independent analogue channels with inputs up to ± 200V, complete with SIV function for interpreting measured signals.

• Signal Generator: for simulating the pulses generated by sensors and the commands generated by control units and testing solenoid valves and other components.

• Ammeter: for measuring currents. A BICOR clamp-on ammeter is needed to allow TwinProbe to run these tests.

A/C RECHARGE STATIONS: KONFORT FOR R1234yf AND R134a

The KONFORT 700 line features nine models, with different specifications and operating modes, used for effective maintenance on both vehicles with new R1234yf refrigerant, and those using the R134a. The range is produced on an assembly line that is the only one of its kind in the world to ensure the ultimate in quality and lasting reliability. KONFORT recharge stations are covered by a total of eight registered international patents. The exceptional characteristics of their components guarantee a refrigerant recovery rate of over 95%. Essential, stylish design combines with easy handling, sturdiness and safety to make all A/C system maintenance operations quick and easy.

KONFORT 760R BUS

R134a | R1234yf | TÜVRheinland

KONFORT 760R BUS is the ideal solution for carrying out A/C system maintenance and refrigerant recharging on all heavy goods vehicles. This highly-automated workstation - recommended by the world's leading vehicle makers - implements advanced technology and features a total of eight registered international patents. 760R BUS has been designed specifically for large A/C systems. The operating software installed reflects the strictest SAE standards in terms of precision and accuracy. Using a vast array of sensors, KONFORT 760R BUS can manage refrigerant identification and recharging operations with unprecedented precision. An evolved TFT colour display follows all the phases of the automated recharge cycle, displaying images, graphics and data screens. Any malfunction encountered is flagged up and identified by a detailed error message. A removable memory (SD card) allows the station to communicate with a stand-alone Windows PC for the purpose of updating the database of makes and models, checking and certifying completed maintenance operations, and upgrading software when necessary. KONFORT 760R BUS can be fitted with a refrigerant identifier kit to prevent contamination between different types of refrigerant and to detect the presence of counterfeit products in the vehicle's air-conditioning system.

MAIN FEATURES

- R134a or R1234yf compatible
- High visibility colour TFT display with interface Graphics
- DATABASE/SERVICE management via SD card
- Rotating gauge display (Excluding Germany)
- 30 Kg internal tank
- +/- 15 gr load precision
- High efficiency refrigerant recovery (above 95%)
- Dual stage vacuum pump
- Hermetically sealed bottles
- Automatic high precision oil injection
- Automatic oil bottle recognition
- Automatic precise refrigerant measurement check
- Scale lock system
- Automatic service procedure management
- Functionality:
  - DATABASE
  - PERSONALISED SERVICE
  - MY DATABASE
- Multilingual software coverage
- Service hose length compensation
- Simplified service
- Automatic non condensable management

OPTIONAL

Flushing Kit, VDC Kit, Climate efficiency kit, refrigerant identifier kit, thermal printer, air conditioning system autodiagnostics.

EMISSIONS DIAGNOSTICS

The TEXA solution for exhaust gas analysis includes a series of tools for performing all the tests and analyses currently required by emission control legislation: GASBOX Autopower, OPABOX Autopower, GAS Mobile, MULTI PEGASO, RC2, RC3, RCM.

EVOLVED SOLUTIONS FOR VEHICLE TEST CENTRES

THE NEW MCTCNet2 STANDARD

Italy's new and long awaited vehicle testing system finally became a reality in January 2015. After an inevitable period of running in, the new system appears to be doing well and proving effective especially in combating the phenomenon of fake testing. TEXA has always led the development of new technologies for exhaust gas analysis, and its latest range of products conform fully to the technical specifications required by the new communication protocol.

All TEXA exhaust gas analysis products conform to the latest, most evolved MCTCNet2 specifications defined by the Full Net2 protocol, which includes 1024 bit RSA encryption.

ETS PC SOFTWARE Dedicated software for vehicle testing centres

TEXA's new ETS PC software provides a complete solution for the management of exhaust gas analysis in vehicle test centres. ETS guides you step by step through the exhaust gas analysis procedure required by the recent MCTCNet2 standard. The software can manage multiple inputs from a series of gas analysers and rev counters. ETS can also autonomously manage any kind of speed test equipment that conforms to Net2 protocol.

GASBOX AUTOPOWER
Exhaust gas analyser

GASBOX Autopower is an exhaust gas analyser for the measurement of CO, CO_2, O_2, HC (and optionally NO) in petrol and gas fuelled vehicles. It is homologated by the Italian Ministry of Transport for use in vehicle test centres on light and heavy vehicles.

OPABOX AUTOPOWER
Opacity meter

OPABOX Autopower verifies the opacity of exhaust fumes from vehicles powered by diesel engines. Its sensors can measure fume opacity from light and heavy vehicles. OPABOX Autopower is homologated according to the latest standards.

GASBOX and OPABOX both come with a practical trolley for easy movement around the workshop. Standard Bluetooth connectivity and the optional Power Pack (external battery pack) make it possible to use both units in a totally wireless way.

MULTI PEGASO GAS PC STAZIONE and GAS MOBILE

MULTI PEGASO is an exhaust gas analysis and control station for conventional vehicle repair shops. The station comprises a dedicated controller with the latest generation processor, and comes with Bluetooth and Wi-Fi communication modules.
PC STAZIONE is designed for use by authorised vehicle test centres. It consists of a high performance desktop PC with 4 GB of RAM and a 500 GB hard disk, and multiple serial ports for controlling up to 8 instruments simultaneously.
GAS Mobile is a lightweight and compact portable device featuring a high-visibility graphic LCD display used to test all types of engines, running on petrol, diesel or alternative fuels. It exploits Bluetooth wireless technology to communicate with OPABOX Autopower, GASBOX and the RC2 and RC3 engine speed and temperature gauges.

RC3, RC2 and RCM

RC3 is a universal rev counter for use with light and heavy vehicles. It incorporates two data acquisition systems: Battery ripple and OBD cable. As an option, it can also be used with an inductive clamp or piezoelectric sensor. RC3 supports EOBD protocols: ISO 9141, KW2000, PWM, VPW, CAN BUS and the recent WWH-OBD.
RC2 is a rev counter for cars. It comes with a Battery Ripple sensor but can also be used with an inductive clamp or piezoelectric sensor (both available as optionals). RCM is an exclusive motor vehicle rev counter from TEXA that uses an innovative directional antenna to measure engine speed with great accuracy. RCM is ideal for use with fully faired motorcycles on which it is not possible to use an inductive clamp.

TECHNICAL TRAINING

TEXA believes customer training to be particularly important, since adequate technical competence and the correct use of diagnostic tools are critical to the success of repair work. The teaching methods used in TEXA courses are based on an ideal mix of theory and practice on vehicles. Practice plays a fundamental part, as it combines testing and simulations with use of the mechanic's own TEXA diagnostic tools, thus stimulating more active and dynamic participation and more effective learning.

TECHNICAL TRAINING

EDU

TRUCK DIAGNOSTIC SPECIALIST

S2T
MAN EDC7/C32 COMMON RAIL ENGINE MANAGEMENT
Duration: 6h

The EDC7 system used by the MAN group: the hydraulic circuit and system pressure control, analysis and functioning of the components of the Euro 3 version. Analysis and checking of electronic components and strategies for repair; using an oscilloscope to check signals and using a diagnostic tool to read and analyse errors and parameters in Euro 4 and Euro 5 systems with an EDC7 C32 electronic control unit.

ADVANCED DIAGNOSIS OF TRUCK SYSTEMS

G19
ELECTRONICALLY CONTROLLED SUSPENSIONS
Duration: 12h

The design of pneumatic suspension systems; system types; component identification; pressure testing; checking lift axles; traction assistance, etc. ECAS system architecture and components; control units, pressure sensors and actuators of the most common configurations (4X2, 6X2, etc.); differences between development stages.
System diagnosis and calibration on DAF, Iveco, MAN, Mercedes, Renault, Scania and Volvo vehicles. Description of the ECS system and its components; differences between systems; recovery strategies; calibration procedures.

G20
ADVANCED EBS PROGRAMMING FOR TRAILERS
Duration: 12h

The structure of an EBS system; electronic braking correctors; main components; EBS modulators; EBS and ABS relay valves, etc. Configurations and settings using an autodiagnostic tool; transferring configurations; control unit parameter settings, etc.. Description of the risks operators encounter when using settings functions on autodiagnostic tools. Important! An adequate understanding of the risks involved is essential when using the advanced and special programming functions of TEXA software to change settings and calibrate braking systems.

G21
SELECTIVE CATALYTIC REDUCTION (SCR) / ADBLUE™ SYSTEMS
Duration: 12h

European emission legislation and post-treatment technologies; anti-particulate filter systems and DPF systems; types of SCR system; typical faults; analysis of Bosch Denoxtronic systems; autodiagnostic procedures for DAF, MAN and SCANIA; analysis of Bosch Denoxtronic2 systems; diagnostic procedures for IVECO and Volvo Renault; diagnosis of CUMMINS systems; analysis and diagnosis of the Mercedes Bluetec system; functioning of the Scania/Mercedes Euro VI system.

S3T
DMCI - DAF MULTI CONTROLLED INJECTION ENGINE MANAGEMENT
Duration: 8h

Analysis of system components with DMCI CF75 control unit connections and pinning; testing sensors with the oscilloscope and checking the hydraulic circuit. Supplementary functions, compression and cylinder pressure testing, acceleration testing, glow plug relay testing and turbocharger testing. DMCI system settings, including pump and injector coding.

Verify the availability of courses in your own country.

TEXA

TEXA was established in 1992 at Monastier di Treviso, and today is a European leader in the design and production of multibrand diagnostic tools, exhaust gas analysers and air conditioning maintenance stations.

TEXA operates virtually all over the world through an extensive distribution network. In Spain, France, Great Britain, Germany, Brazil, the United States, Poland, Russia and Japan, TEXA markets its products directly through its own subsidiaries. TEXA employs some 500 people around the world, including over 100 engineers and specialists working in Research and Development.

Over the years, TEXA has received a great deal of international recognition. The company won the coveted Frost & Sullivan Award in 2006 and 2007, the GIPA (Groupement Inter Professionnel de l'Automobile) Award in 2009 for its TEXAEDU programme and again in 2013 for its communications.

In 2009, TEXA won the Gold Medal at the Grand Prix Internationaux dell'Innovation Automobile in Paris and in 2011 the "Galeria de Innovacion" Award at Motortec in Madrid.

In 2011, the President of the Italian Republic, Giorgio Napolitano, presented TEXA's founder and CEO, Bruno Vianello, with the national award reserved for Italy's most innovative company.
In 2014 TEXA repeated its 2010 success at Frankfurt, when it won the prestigious Automechanika Innovation Award in two separate categories and also won the Autotrade Expo Innovation Award in Dublin.
In 2015, MIT Technology Review classed TEXA as one of the ten most "disruptive" companies in Italy.
All TEXA tools are designed, engineered and built in Italy, using modern automated production lines, a guarantee of maximum precision. TEXA focuses careful attention on product quality, and has obtained certification in accordance with the strict ISO TS 16949 requirements for suppliers of original equipment to the automotive industry.

To check out the extensive coverage of TEXA products, go to:
www.texa.com/coverage

To check on IDC4E compatibility and minimum system requirements, go to:
www.texa.com/system

www.facebook.com/texacom

www.youtube.com/texacom

COMPANY WITH QUALITY SYSTEM CERTIFIED BY DNV
= ISO 9001 =

MADE IN ITALY

cod. 8801786
05/2015 - Inglese - V.3.0

TEXA S.p.A.
Via 1 Maggio, 9
31050 Monastier di Treviso
Treviso - ITALY
Tel. +39 0422 791311
Fax +39 0422 791300
www.texa.com - info.it@texa.com